CHANGE No.		DIMENSIONS IN MILLIMETRES UNLESS STATED OTHERWISE	DO NOT SCALE - IF IN DOUBT ASK	REMOVE SHARP EDGES & BURRS	THIRD ANGLE PROJECTION

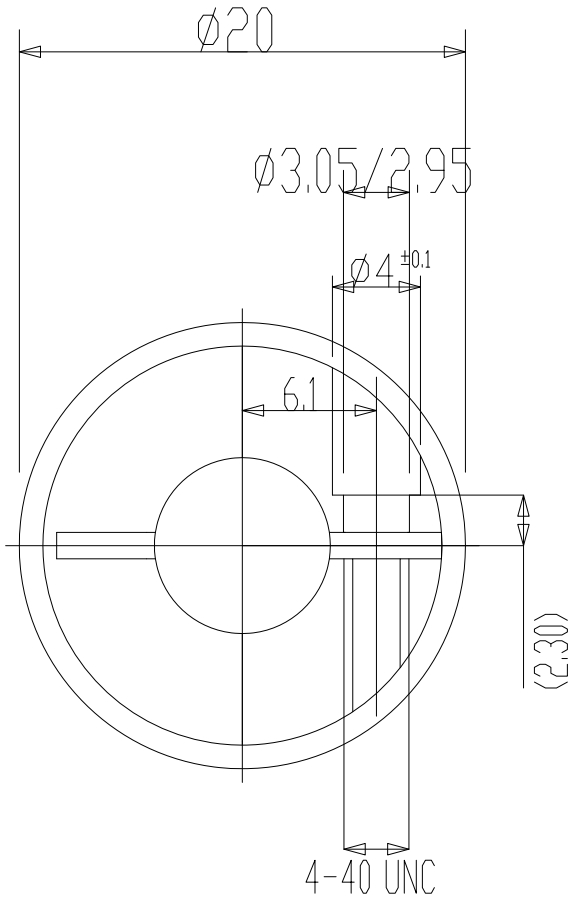

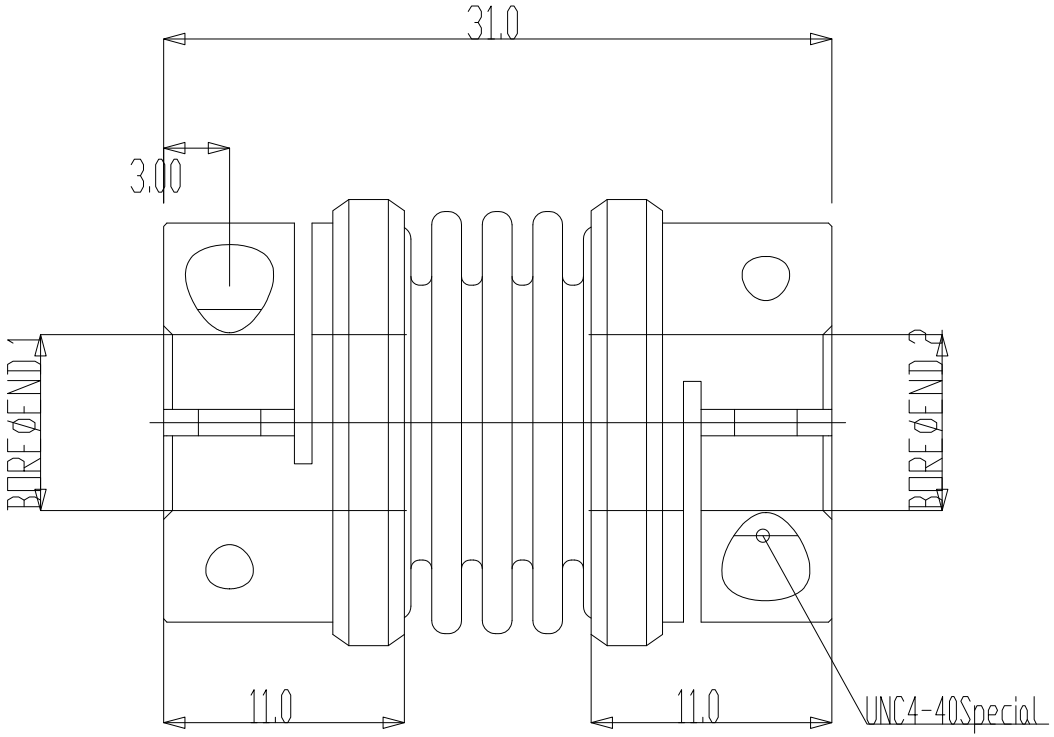

UNC4-40スペシャル締付け管理トルク(厳守)
材質12.9(黒色) 0.51 Nm
材質A2-70(SUS) 0.51Nm
(座面圧縮面圧による制限による)

ITEM	SAP NUMBER	OLD PART NUMBER	OPERATIONS/DESCRIPTION	QTY	MADE FROM/DRG NR
		2013-175			

MIGHTY CORPORATION LTD.
(株)マイティ

MBC-S-19旧タイプ ベローズカップリング

TITLE: BELLOWS 19 SHORT CLAMP COUPLING - OLD VERSION

PROJECT FILE: A3 DRAWING

TOLERANCES UNLESS OTHERWISE STATED
METRIC:- 2 DECIMAL PLACES ± 0.1mm - 1 DECIMAL PLACE ± 0.4mm
IMPERIAL:- 3 DECIMAL PLACES ± (.004")
ANGULAR:- ± 2 DEGREES

DRAWN	DATE	SCALE	DRAWING NUMBER	ISSUE	SHEET	SAP NUMBER
T.C	14/08/2013	4:1	2013-175	1	1	