One-way friction clutch

MTLA-57SR/ 115SR/230SR

Torque
0.3~22.5 N·m

Size
MTLA-57SR
(0.3~5.5 N·m)
MTLA-115SR
(0.6~11.2 N·m)
MTLA-230SR
(2.3~22.5 N·m)

Inner diameter
6~30 mm

Set screw Clutch side

MTLA-SR-AB

1 shaft
Mounted with **pulley/ sprocket**

2 shafts
Set screw rigid

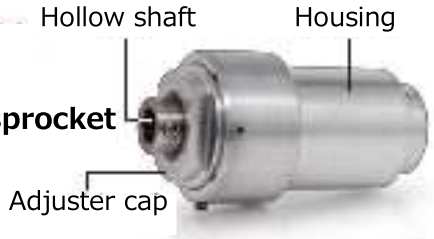

MTLA-SR-C

2 shafts

Set screw
mounted with oldham coupling

MTLA-SR-D

2 shafts

Clamp mounted with oldham coupling

Specifications

Type			Max. Set slip torque [N·m]	Min. Set slip torque [N·m]	Torque [N·m]	Power dissipation at 20℃ [W] (20℃時)	Lateral [mm]	Angular [°]	Endplay [mm]	Inertia moment [kg·m²×10⁻⁴]	Mass [g]
MTLA	57 SR	AB	5.5	0.3	13.3	9	–	–	–	1,550	157
	115 SR		11.2	0.6	22.1	22	–	–	–	11,000	420
	230 SR		22.5	1.2	46.5	30	–	–	–	36,700	867
	57 SR	C	4.0	0.3	4.0	9	3.0	1	0.2	2,950	182
		D	4.0	0.3	4.0	9	3.0	1	0.2	2,950	182
	115 SR	C	11.2	0.6	17.0	22	5.0	1	0.3	17,690	550
		D	11.2	0.6	17.0	22	5.0	1	0.3	17,690	550
	230 SR	C	22.5	1.2	37.5	30	7.0	1	0.4	81,880	1,198
		D	22.5	1.2	37.5	30	7.0	1	0.4	81,880	1,198

Materials

All Type	Housing	Hollow shaft	Adjuster cap	CD adapter
	Al Alloy	Stainless	Al Alloy	Al Alloy

※For C,D types, please refer to the outer diameter of oldham coupling on page 25, 41, 57.

< About allowable torque>
※Torque in the engaged direction of the clutch

<About the engaged direction of clutch
※The engaged direction of clutch can choose between CW and CCW. (Please see page 76 for detail)

Drawings

MTLA-57SR-AB

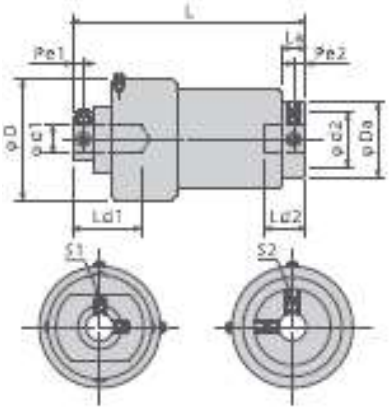

MTLA-57SR-C

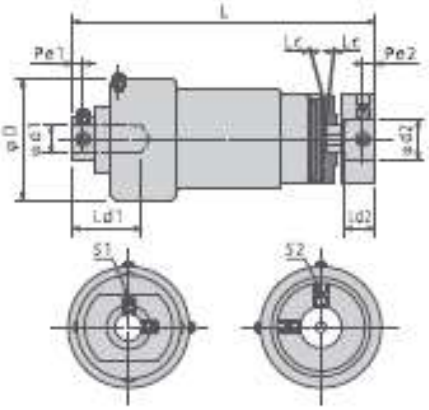

MTLA-57SR-D

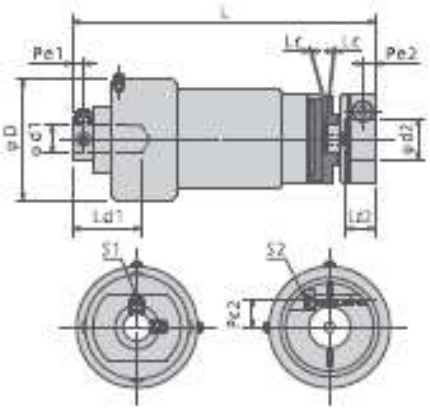

MTLA-115SR-AB MTLA-230SR-AB

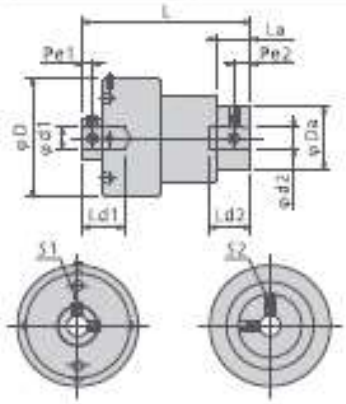

MTLA-115SR-C MTLA-230SR-C

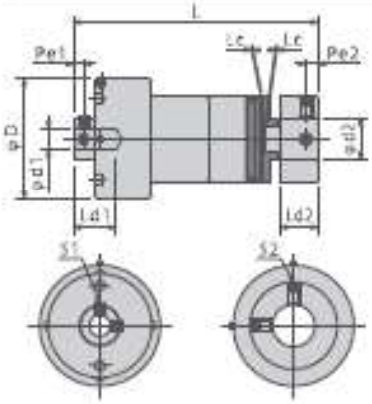

MTLA-115SR-D MTLA-230SR-D

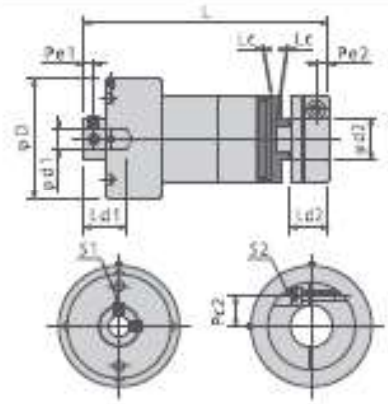

Dimensions

Type			Shaft bore diameter d1[mm]	Shaft bore diameter d2[mm]		Overall length L[mm]	Outer diameter D[mm]	Length La[mm]	Outer diameter Da[mm]	Clearance Lc[mm]	Max mounting length Ld1[mm]	Min mounting length Ld1[mm]
MTLA	57 SR	AB	8	8		67.4	35.0	7.0	21.97	—	20.0	12.0
	115 SR	AB	10	10		79.8	57.2	16.0	29.97	—	20.0	15.0
	230 SR	AB	12	12		88.9	73.1	25.4	46.97	—	24.0	18.0
	57 SR	C	8	6~12		86.7	35.0	—	—	0.10	20.0	12.0
		D	8	6~12		86.7	35.0	—	—	0.10	20.0	12.0
	115 SR	C	10	8~20		115.3	57.2	—	—	0.15	20.0	15.0
		D	10	8~20		115.3	57.2	—	—	0.15	20.0	15.0
	230 SR	C	12	12~30	Keyway standard	142.4	73.1	—	—	0.20	24.0	18.0
		D	12	12~30		142.4	73.1	—	—	0.20	24.0	18.0

Type			Max mounting length Ld2[mm]	Min mounting length Ld2[mm]	Screw position Pe1[mm]	Set screw S1[mm]	Torque [N·m]	Screw position Pe2[mm]	Screw position Pc2[mm]	Set screw S2[mm]	Cap screw S2[mm]	Torque [N·m]
MTLA	57 SR	AB	12.0	6.0	3.2	M4	1.6	3.5	—	M4	—	1.6
	115 SR	AB	20.0	15.0	4.8	M5	3.0	8.0	—	M5	—	3.0
	230 SR	AB	24.0	18.0	6.4	M6	5.1	9.5	—	M6	—	5.1
	57 SR	C	8.6	7.0	3.2	M4	1.6	3.5	—	M4	—	2.0
		D	8.6	8.2	3.2	M4	1.6	3.6	8.1	—	M3	2.1
	115 SR	C	18.1	11.9	4.8	M5	3.0	5.8	—	M6	—	6.5
		D	18.1	15.5	4.8	M5	3.0	5.8	14.0	—	M5	9.6
	230 SR	C	28.8	18.4	6.4	M6	5.1	8.0	—	M6	—	6.5
		D	28.8	23.3	6.4	M6	5.1	8.0	21.0	—	M6	16.3

※Total length values including clearance