MBL

WITH CLAMPING HUB

10 - 800 Nm

PROPERTIES

FEATURES

- for spanning larger distances between shaft ends
- standard lengths up to 6 meters
- no intermediate support bearings required
- extremely straight and laterally stiff intermediate tube

MATERIAL

- **Bellows:** high grade stainless steel
- **Intermediate tube:** up to size 150 aluminum, size 300 and up steel, optional CFK
- **Hubs:** up to size 60 aluminum, size 150 and up steel

DESIGN

Two clamping hubs with a single clamping screw in each. A special support system carries the weight of the tube on the hubs. Operable temperature range from -30 to +100 °C.

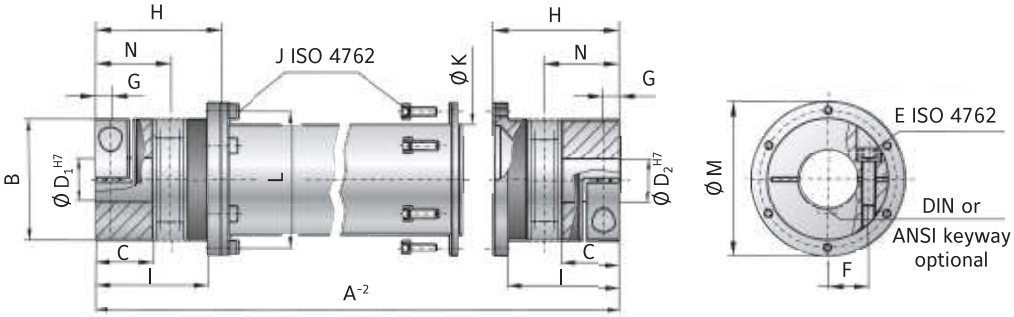

MODEL MBL

SIZE		10	30	60	150	200	300	500	800
Rated torque (Nm)	T_{KN}	10	30	60	150	200	300	500	800
Overall length min. to max. (mm)	A^{-2}	110 - 6000	140 - 6000	170 - 6000	215 - 6000	215 - 6000	250 - 6000	260 - 6000	260 - 6000
Outside diameter clamping hub (mm)	B	40	55	66	81	90	110	123	134
Fit length (mm)	C	16	27	31	35.5	40.5	43	50	48
Inside diameter from Ø to Ø H7 (mm)	$D_{1/2}$	5 - 20	10 - 28	12 - 32	19 - 42	22 - 45	30 - 60	35 - 60	40 - 72
With keyway max. Ø H7 (mm)	$D_{1/2}$	17	23	29	36	45	60	60	66
ISO 4762 clamping screw	E	M4	M6	M8	M10	M12	M12	M16	2x M16
Tightening torque (Nm)	E	5	15	40	70	110	130	200	250
Distance between centers (mm)	F	15	19	23	27	31	39	41	48
Distance (mm)	G	5	7.5	9.5	11	12.5	13	17	18
Length bellows body (mm)	H	44.5	57.5	71	78	86	94	110	101
Distance (mm)	I	38.5	51	61	69	75.5	81	96	89
ISO 4762 clamping screw	J	4x M4	6x M4	6x M5	8x M6	8x M6	8x M8	8x M8	10x M8
Tightening torque (Nm)	J	3	4	7	10	12	30	30	40
Outside diameter tube section (mm)	K	35	50	60	76	90	100	110	120
Bolt hole circle Ø (mm)	L	45	62.5	71.5	88	100	120	132	138
Outside diameter flange (mm)	M	52	70	80	98	110	135	148	153
Shaft average value (mm)	N	25	34	41	47	52	56	66	64

For maximum misalignment values see page 16.

ORDERING EXAMPLE	MBL	10	1551	18	19.05	XX
Model	●					Special designation only (e.g. special bore tolerance).
Size		●				
Overall length mm			●			
Bore D1 H7				●		
Bore D2 H7					●	

For custom features place an XX at the end of the part number and describe the special requirements (e.g. ZA / 10 / 1551 / 18 / 19.05 / XX; XX=anodized aluminum)