MEL4

FOR CONICAL SHAFT ENDS

20 - 150 Nm

PROPERTIES

FEATURES

- for tapered shafts
- short compact design
- easy assembly
- concentrically machined hubs
- backlash free
- electrically isolating

MATERIAL

- **Clamping hub D_1:** high strength aluminum
- **Conical hub D_2:** steel
- **Elastomer:** wear resistant thermally stable TPU

DESIGN

Two coupling hubs are concentrically machined with curved jaws. One side with clamping hub and screw per ISO 4762. One side with tapered bore and keyway per customer specifications.

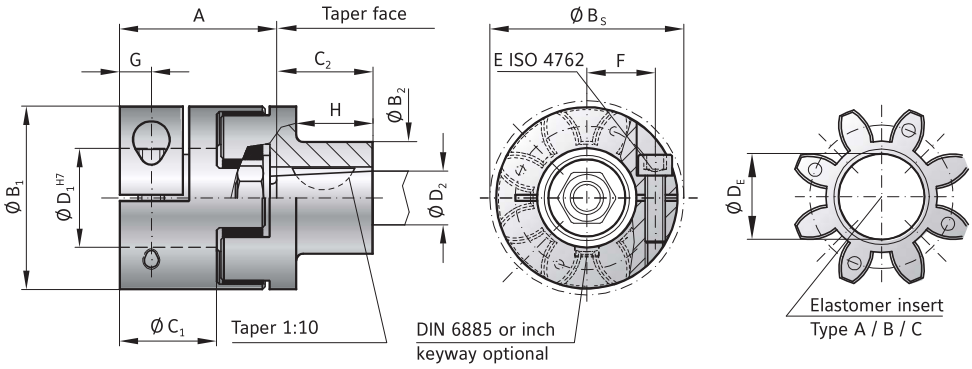

MODEL MEL4

SIZE			20			60			150		
Type (Elastomer insert)			A	B	C	A	B	C	A	B	C
Rated torque	(Nm)	T_{KN}	17	21	6	60	75	20	160	200	42
Max. torque*	(Nm)	T_{Kmax}	34	42	12	120	150	35	320	400	85
Overall length	(mm)	A	42			50			57		
Outside diameter of clamping hub	(mm)	B_1	42			56			66.5		
Outside diameter of tapered bore hub	(mm)	B_2	20			28			30		
Outside diameter with screw head	(mm)	B_S	44.5			57			68		
Mounting length	(mm)	C_1	25			30			35		
Mounting length	(mm)	C_2	15			27			28		
Inside diameter range H7	(mm)	D_1	8-25			12-32			19-36		
Possible tapered bore diameter	(mm)	D_2	11			16			16		
Inside diameter of elastomer	(mm)	D_E	19.2			26.2			29.2		
Clamping screw (ISO 4762)		E	M5			M6			M8		
Tightening torque of the clamping screw	(Nm)		8			15			35		
Distance between centers	(mm)	F	15.5			21			24		
Distance	(mm)	G	8.5			10			12		
Length	(mm)	H	9.5			21			19		
Speed standard	(min^{-1})		12500			11000			10000		
Speed balanced	($10^3 min^{-1}$)		45	60	35	31	31	25	22	26	18

* in Maximum transmittable torque depends on the bore diameter (overall clearance between shaft and hub 0.01 to 0.05 mm; shaft oiled) Higher torques upon request.

For information on shaft misalignment, torsional stiffness, and other details about the elastomer inserts **see pages 72 + 73.**

ORDERING EXAMPLE	MEL4	20	A	24	XX
Model	●				Non standard e.g. finely balanced
Size		●			
Type Elastomer insert			●		
Bore Ø D1 H7				●	
For custom features place an XX at the end of the part number and describe the special requirements (e.g. EK4 / 20 / A / 24 / XX)					