optional stainless steel

MODEL **MLK**

LINEAR COUPLINGS

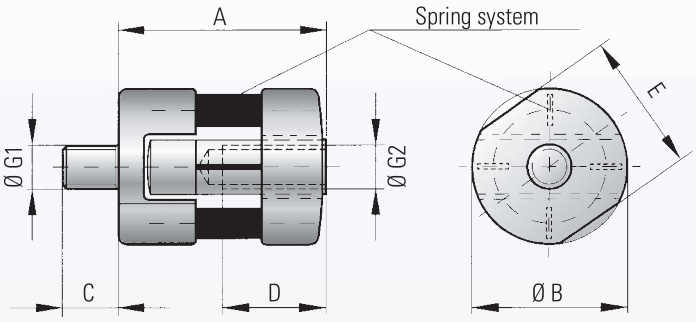

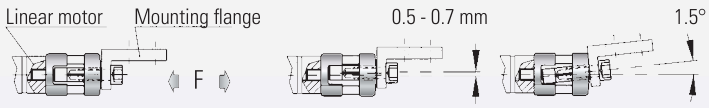

Zero backlash in axial direction lateral and angular elastic

Properties:

- Zero backlash in axial direction
- compensates angular misalignments up to 1.5° and lateral misalignments up to 0.7 mm (0,028 inch)
- low mass & weight = low inerta
- compact design
- designed for high tensile and compressive forces in highly dynamic applications

Material: Coupling components are made of high-strength aluminium. Spring elements are made of special spring steel

Structure: Input side: internal metric thread
Output side: external metric thread
The input - and output connection is effected by a backlash free spring system

Temperature range: -30 to + 120° C (3.6 F to 270 F)

Backlash: absolutely backlash-free

Brief overloads: Acceptable up to 1.5 times the rated value

Service life: These couplings have an infinite life and are maintanance free if operated within performance limits.

Special Design: Custom bores, threads, and material available upon request.

Ordering specifications

MLK / 70 / XX

- Model
- Series/Nominal tensile force*
- Special e.g. VA-Design

Model MLK		Series					
		70	150	300	500	800	2000
Pressure force (N)	F	70	150	300	500	800	2000
Overall length (mm)	A	24	33	41.5	52	62	93
Outer diameter (mm)	B	18	22	30	42	50	72
Outer diameter of thread (mm)	$G_{1/2}$	M5	M6	M8	M10	M12	M16
Max. tightening torque thread (Nm)	$G_{1/2}$	4	7	18	30	60	170
Thread length (mm)	C	6.5	8	10	13	18	24
Thread length (mm)	D	10	12	16	20	24	32
Key width (mm)	E	16	20	27	38	46	60
Weight approx. (g)		11	23	57	135	236	580
Lateral restoring force (N)	max. values	10	18	48	96	122	180
lateral (mm)	max. values	0.5	0.5	0.5	0.7	0.7	0.7
angular (Degree)	max. values	1.5	1.5	1.5	1.5	1.5	1.5

Mounting Instructions

- Mounting: "Wrench flats" have been machined into the coupling hubs to aid in the mounting and dismounting of the coupling.
- **Caution: Do not exceed the tightening torque during mounting (see table)!**
- While mounting, ensure not to damage leaf-spring system
- **Maximum lateral and angular misalignment value must not be exceeded.**

Special Designs

CYLINDRIC LINEAR COUPLINGS

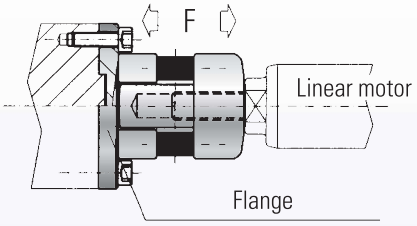

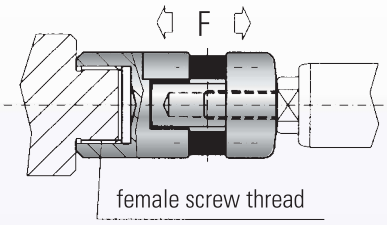

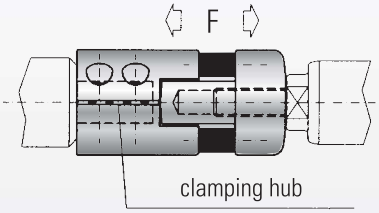

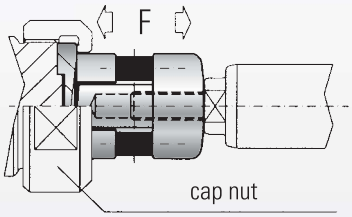

FLATENED LINEAR COUPLINGS

- Backlash free and space saving linear motor, or linear guidance connection

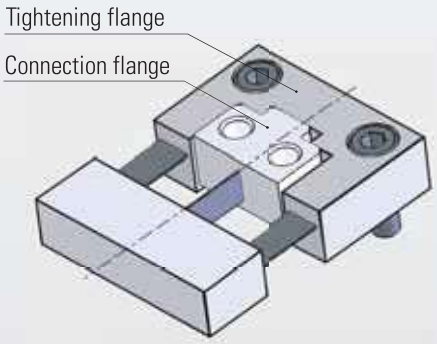

Top view

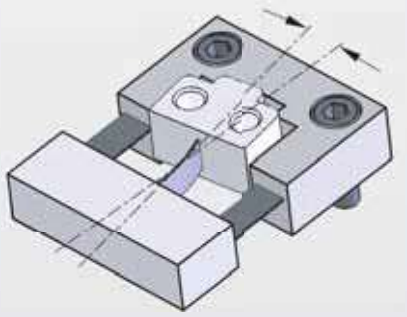

Angular misalignment

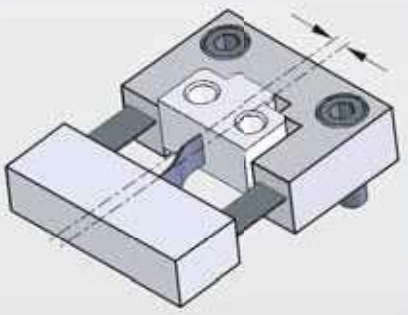

Lateral misalignment (sideways)

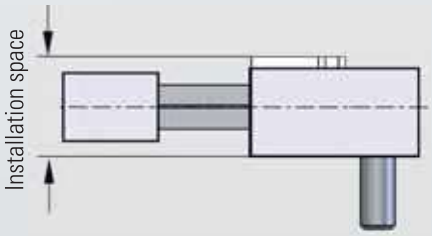

Side view

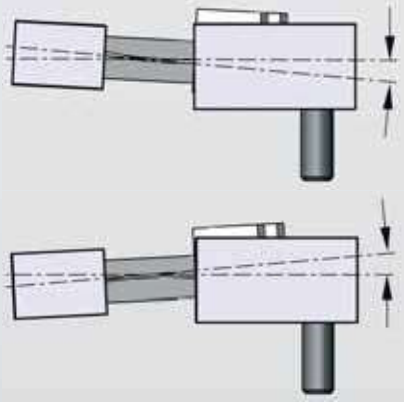

Angular misalignment (horizontal)

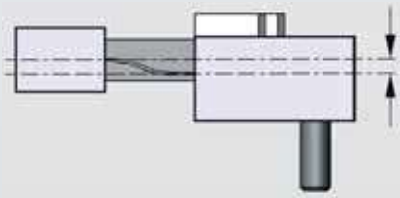

Lateral misalingment (horizontal)